Instruction manual
For safety cabinet



Model 795+E

CONTENT

1. Description / Use Page 2

2. Technical features Page 2

3. Installation and commissioning Page 2

4. Internal equipments Page 4

5. Storage Page 4

6. Ventilation Page 5

7. Safety controls Page 6

8. Spare parts Page 6

9. Recycling Page 7

10. Warranty Page 7

11. Control sheet for the user Page 8

1. DESCRIPTION / USE

The 90-minute fire resistant safety cabinets are compliant to the standard EN 14470-1, and have been tested successfully up to 105 minutes. They allow you to safely store your flammable products and delay spreading of potential fire in the cabinet, while waiting for rescue unit arrival.

2. TECHNICAL FEATURES

Compliance :

- Compliance with the standard EN 14470-1 – 90 minutes (04/2004) et EN 1363/1 (06/2000)
- Compliance with the standard FM 6050 (Factory Mutual International)
- Standardized pictograms, compliant with the standards ISO 3864 and ISO 7010, with the directive 92/58/CEE, with the standard EN 14470-1 (04/200) and FM specifications.
- Compliance with the articles R. 5132-66 and R. 5132-68 of the Public Health Code

Technical features :

- Fire-proof 105 minutes according to the ISO 834 fire heating curve
- Double wall construction, with outer walls in steel 12/10th and epoxy paint RAL 9010, and interior walls in white melamine RAL 9010
- Separation per chemicals type, according to the Public Health Code and the INRS recommendations
- Standardized pictograms provided
- Locking-system
- Ventilation openings, with a connecting sleeve diameter 100 mm for an eventual connection
- Ventilation ducts with a thermo-fuse
- Thermo-expanding door seals, allowing to insulate the content of the safety cabinet in case of a fire
- Self-closing doors with the possibility to keep the doors open
- If the temperature rises to 47°C, the doors are closed automatically
- Earth connection
- External dimensions : H 1950 x W 1137 x D 620 mm
- Storage capacity : 250 liters
- Weight : 453 KG

3. INSTALLATION AND COMMISSIONING

Installation

The safety cabinet has to be installed on a flat surface that can bear its weight with the products inside.
Ensure that the safety cabinet is correctly wedged, as for the cabinet not to topple, and for the automatic locking system to work correctly. The eventual blocking has to be done by the user.

As to wedge the safety cabinet, you can use the little maroon wedges provided with your cabinet.
The correct leveling of the cabinet must cart off any distortion of the frame, allow the doors to be strictly parallel compared to the frame, and take away any rubbing of the doors on the cabinet's frame.

The installation location must guarantee :

- That it is not exposed to any heat source
- That it is protected against moisture and that the ambient temperature of the location is neither less than 5°C, nor more than 40°C

In order to secure the cabinet, use the small brown wedges supplied with your cabinet.
See the following picture.



Once the cabinet is properly secured, it is necessary to put in place the plinth at the bottom of the cabinet. The plinth is delivered inside the cabinet and allows to hide the feet of the cabinet.
It slips in front of the cabinet, to be in contact with the feet. The seal must be on the top.
See the following picture.
To remove the plinth, simply pull on both sides.



Once the safety cabinet has been correctly stalled, you need to fix the little pins on the doors, by screwing them clockwise (like in the below outline) :

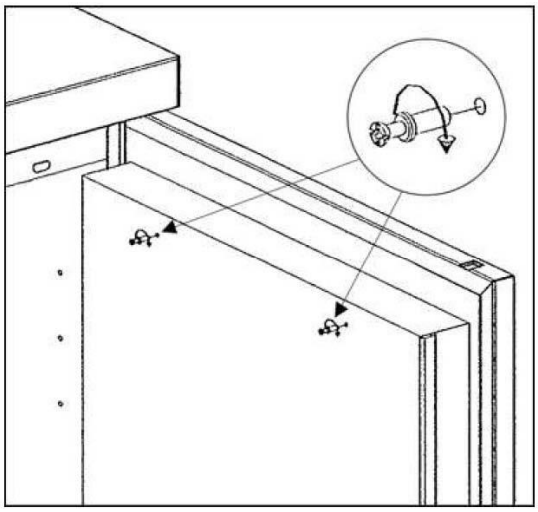

Transport and handling

The safety cabinet that you received has been protected and transported in optimal conditions, as to be protected from any damage.

It has to be lifted only by suitable equipment (suction cup, strap…). It has to be carried in a vertical position, and it must not be lying.
It is imperative not to tilt the cabinet when it is carried. Indeed it can cause damages that can alter the right functioning of the cabinet.

On the other hand, if it has to be moved, the cabinet has to be placed on a pallet and strapped, as to avoid any fall.

Commissioning

After having unwrapped the cabinet, ensure that you also received a set of two keys.
Your safety cabinet has to be installed, used and maintained as to guarantee the users protection.

Swing doors

The swinging doors can be open by pulling the handle. The automatic closing system allows the doors to be closed systematically after every use (if the blocking doors system is not activated).

Door closing mechanism

The door closing mechanism is adjusted in the warehouse, in usual conditions. In case of an important evolution of the temperature, its behaviour can evolve.
If the cabinet has been delivered during summer or winter, an adaptation period to the ambient temperature might be required. This period can last up to 12 hours.

Door blocking system

The door blocking system allows maintaining the doors open, during an undetermined period. It allows safe manipulation of the chemicals.
If the ambient temperature rises over 47°C, the opened door gets unlocked and will automatically close.
It is mandatory for safety reasons, not to impede the proper closure of the doors with an object and to maintain the doors closed if the cabinet is not used.

4. INTERNAL EQUIPMENTS

The cabinet is provided with 3 retention shelves and 1 containment sump.
The shelves have to be fixed at the desired height, by adjusting the cleats on the rack-and-pinion. Each shelf has to be put on its 4 cleats and has to be fixed with the screws, as to avoid any fall. Take care not to exceed the loading capacity per shelf of 50 KG. The shelf has a retention capacity of 12 liters.

The containment sump has to be positioned at the bottom of the cabinet. If you want to use it as a storage area, you must place in a perforated cover plate that is suitable for your containment sump. The latter has a retention capacity of 41 liters.

Be aware that placing a perforated cover plate decreases the total retention capacity of your containment sump. The volume of your containment sump is approximately reduced by 6 liters.

5. STORAGE

Your safety cabinet is exclusively destined to store chemicals in laboratories, industries, schools… in closed containers.
It must not store high concentrated corrosive products.
We remind you that the storage of corrosives can alter the quality of your safety equipment. On the other hand, we remind you that damages due to a bad use of the equipment and in particular to corrosion won't be covered by our warranty.
It is highly recommended to connect your safety cabinet to a ventilation system.

6. VENTILATION

First of all, you need to remove the red covers, which are positioned on the ventilation openings of the cabinet.
As to evacuate the vapors, you need to connect the connecting sleeve, which possesses the red arrow indicated “OUT”. The air inlet possesses a green arrow indicated “IN”.

We highly recommend connecting your safety cabinet to a ventilation system, as to evacuate the eventual vapors contained in it.
The air renewal has to be at least 10 times the volume of the cabinet, per hour. Moreover, ensure that the ventilation runs 24h/7.

In compliance with the standard EN 14470-1 and as to avoid any confinement of the vapors, ventilation is required to assure an air renewal. Every user has to contact his chemicals supplier or the safety officer of his company, before storing any chemicals. See our ventilation and filtration boxes range technical datasheet.

Connection to a ventilation system

The air inlet and outlet are situated on the top of the cabinet. See the below outline.

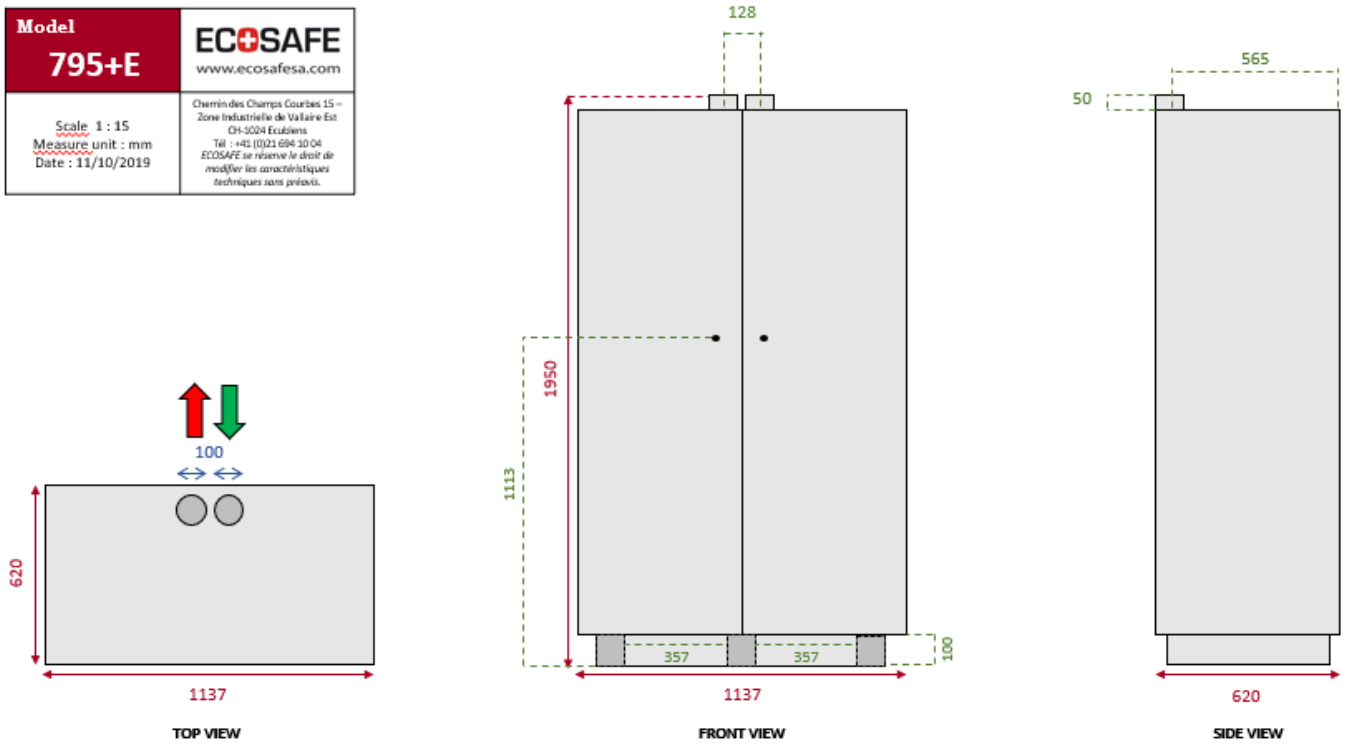

How to choose a ventilation or a filtration box ?

Ventilation boxes are connected to the safety cabinet with a connecting kit (including a connecting sleeve, 2 hose clamps and 1 meter of flexible sheath) ; the fan included in the box extracts the toxic vapors contained in the cabinet, and reject it to the outside of the building thanks to the roof or wall extraction.

If you cannot reject the vapors to the outside, you need a filtration box.

Filtration boxes are equipped with an activated carbon filter, which purifies the toxic vapors in the box, and rejects it in the room in a healthy fashion. Filtration boxes are delivered with the activated carbon filter that you need to renew once a year.

Running without any mechanic ventilation

It is possible for your safety cabinet to run without mechanical ventilation. However, your cabinet has to be placed in a location that provides its own ventilation system (at least 5 times the volume of the location, per hour).
The cabinet itself and a radius of 2,5 meters directly around is a dangerous area subject to explosions.

On the other hand, if the ventilation system of your cabinet is not running, you have to indicate it, by putting an etiquette on the cabinet, saying “Safety cabinet not connected to the mechanic ventilation” (etiquette is not provided).

7. SAFETY CONTROLS

Your safety cabinet is a safety equipment. As to guarantee its perfect efficiency, you have to check the equipment regularly.

Daily safety controls :

- Check if the products (liquids, powders…) have flowed in the containment sumps. If it has, they have to be emptied and cleaned promptly, with suitable equipment (absorbent mat…).
- Check that the cabinet and its internal equipments are not corroded.
- Check that the cabinet does not have any mechanical damages.
- Check the proper closing of the doors.
- Check the proper working of the locking system.

Monthly safety controls :

- Check the proper working of the doors (opening and closing)
- Check the working of your ventilation system thanks to, for example, a piece of paper
  (Only if your cabinet is connected to a mechanical ventilation system)

8. SPARE PARTS

Elements :

- Thermo-expanding door seals *: Contact us*
- Door handle *: Contact us*
- Locking system + set of keys *: Contact us*
- Standardized pictogram : P/N **PICTOEN**
- System to maintain the doors open *: Contact us*
- Door closer mechanism *: Contact us*
- Retention shelf : P/N **E35**
- Containment sump : P/N **B35**
- Perforated cover plate : P/N **C35**

9. RECYCLING

The safety cabinet can be entirely dismounted. Various elements such as the steel can be recycled. Ensure to respect the national and local waste disposal terms. Those elements should not be mixed with household waste.

10. WARRANTY

Your equipment holds a 12 months warranty against every manufacturing defect (limited to ordinary conditions of use, from the date indicated on the delivery note).
Our warranty can be applied only in case of manufacturing defects or hidden fault. The warranty covers only the replacement of the faulty goods or pieces indicated by our quality or technical department, as they are the only one able to determine the condition. Repair of the equipment must be performed in our warehouse.

The spare parts are under 3 months warranty upon their settlement.

The warranty cannot be applied in the following cases :
The equipment has not been stored, used or maintained in accordance with the standards by the user
In case of a damage of the equipment by the user or a third party
The equipment had a modification or a repair by the user or a third party, without any prior written authorization by ECOSAFE
In case of a bad use of the equipment
In case of a normal attrition of the equipment
In case of a bad installation of the equipment
In case of damage caused by the corrosion

The activation of the warranty won't extend the term. Our warranty stops if the customer has not notified us in a 7 days term after seeing the fault ; date that the customer has to prove.

11. CONTROL SHEET FOR THE USER

	YES	*NO*
The opening and the closing of the doors are working correctly		
The locking system of the doors works correctly		
The automatic closing of the doors works correctly		
The doors blocking system works correctly		
The mechanic ventilation system is running correctly (if applicable)		
The ventilation system is not obstructed		
The air inlet and outlet are clean		
The standardized pictogram on the door is in good condition and visible		
The door hinges are lubricated		
The locking system is lubricated		
The shelves and the containment sump are clean		
The door seals are in good condition		

Remarks :

Date :

By :

Signature